EE-260

VIA ETX Motherboard

User's Manual

Edition 1.0

2006/03/03

UniChromePro

Copyright

Copyright 2006. All rights reserved. This document is copyrighted and all rights are reserved. The information in this document is subject to change without prior notice to make improvements to the products.
This document contains proprietary information and protected by copyright. No part of this document may be reproduced, copied, or translated in any form or any means without prior written permission of the manufacturer.
All trademarks and/or registered trademarks contains in this document are property of their respective owners.

Disclaimer

The company shall not be liable for any incidental or consequential damages resulting from the performance or use of this product.
The company does not issue a warranty of any kind, express or implied, including without limitation implied warranties of merchantability or fitness for a particular purpose.
The company has the right to revise the manual or include changes in the specifications of the product described within it at any time without notice and without obligation to notify any person of such revision or changes.

Trademark

All trademarks are the property of their respective holders.

Any questions please visit our website at http://www.commell.com.tw

Packing List

Please check the package before you starting setup the system

Hardware:

EE-260 ETX CPU Module x 1

Cable Kit:

26-pin slim type floppy cable x 1

Serial ATA ribbon cable x 2

Head Sink and four screws

Other Accessories:

Divers CD (including User's Manual) x 1

Printed User's Manual x 1

Index

Chapter 1 <Introduction> 7

1.1 <Product Overview>..... 7

1.2 <Product Specification> 8

1.3 <Mechanical Drawing>..... 10

1.4 <Block Diagram>..... 11

Chapter 2 <Hardware Setup>..... 12

2.1 <Connector Location>..... 12

2.2 <Connector Reference>..... 13

2.2.1 <Internal Connector>..... 13

2.3 <CPU and Memory Setup>..... 14

2.3.1< CPU>..... 14

2.3.2 <Memory> 14

2.4 <Enhanced IDE & CF Interface>..... 15

2.5 <Serial ATA Interface>..... 15

2.6 <Floppy Port>..... 16

2.7 <LAN Interface> 17

2.8 <Onboard Display Interface> 17

2.8.1 <Analog VGA Interface> 17

2.9 <USB2.0 & IEEE1394 Interface>..... 18

2.10 <Serial Port> 18

Chapter 3 <System Configuration>..... 19

3.1 <SATA RAID Configuration>..... 19

3.2 <Audio Configuration> 21

3.3 <Display Configuration>..... 22

Chapter 4 <BIOS Setup> 25

Appendix A <ETX connector Assignment>……27

Appendix B <I/O Port Pin Assignment> 31

B.1 <Floppy Port> 31

B.2 <Serial ATA Port> 31

Appendix C <Flash BIOS> 33

C.1 BIOS Auto Flash Tool 33

C.2 Flash Method 33

Contact Information 35

(The Page is Left For Blank)

Chapter 1 <Introduction>

1.1 <Product Overview>

EE-260 is the ETX module based on VIA Luke CoreFusion ^{TM} Processor. It integrates the VIA embedded Luke Processor with VT8237R+, DDR SoDimm SDRAM, and serial ATA with RAID to provide the economical embedded platform.

VIA Luke CoreFusion ^{TM} Processor & VT8237R+

The board comes with the VIA embedded processor Luke DDR266/333/400 SoDimm integrated the S3 Graphics UniChrome Pro IGP graphics core ,hardware MPEG-2 and MPEG-4 acceleration .

The VT8237R+ provides the board to support Ultra V-Link (1GB/s) , two serial ATA ports with RAID array function, Support 4 x USB2.0 ports and Realtek ALC202A 2 channel audio.

Multimedia solution

Based on VIA CoreFusion ^{TM} Processor, the module provides optional 18/24-bit LVDS interface, which supports dual independent display with CRT.

High Speed Hot-plug Interface

Based on VIA VT8237R+, the board support 4 USB2.0 interfaces with up to 480Mbps of transferring rate.

1.2 <Product Specification>

General Specification	
Form Factor	ETX CPU Module
CPU	Embedded VIA Luke CoreFusion TM processor Ratio: 533MHz/800MHz/1GHz Front side bus: 133MHz **Fanless with Luke 533MHz processor**
Memory	1 x 200-pin DDR SoDIMM SDRAM up to 1GB Unbufferred, none-ECC memory supported only
Chipset	VIA CoreFusion TM and VT8237R+
BIOS	Phoenix-Award v6.00PG 4Mb PnP flash BIOS
Green Function	Power saving mode includes doze, standby and suspend modes. ACPI version 1.0 and APM version 1.2 compliant
Watchdog Timer	System reset programmable watchdog timer with 1 ~ 255 sec./min. of timeout value
Real Time Clock	VIA VT8237R+ built-in RTC with lithium battery
Enhanced IDE	Support two channels & up to four IDE device Support Ultra DMA 33 IDE device
Serial ATA	VIA VT8237R+ integrates 2 Serial ATA interface RAID 0, 1 array Technology supported
Multi-I/O Port	
Chip	Winbond W83697HG controller
Serial Port	Support two RS232 Serial Port
USB Port	Support four USB 2.0 Ports
Floppy Port	Onboard slim type Floppy connector
IrDA Port	Support IrDA compliant Infrared interface supports SIR
K/B & Mouse	Support external PS/2 keyboard and mouse ports
GPIO	8-bit programmable I/O interface
Hardware Monitor	CPU temperature and voltage monitoring
VGA Display Interface	
Chipset	VIA Luke Processor CoreFusion TM built-in S3 Graphics UniChrome Pro IGP graphics core
Core Frequency	200MHz
Memory	BIOS selectable 16/32/64MB shard with system memory
Display Type	Support CRT, LCD monitor with analog display

Optional LVDS Interface	
Chip	VT1631L
Resolution	Support 18/24bit dual channel 1600 x 1200 resolution
Ethernet Interface	
Chip	VIA VT6103 PHY
Type	10Base-T / 100Base-TX auto-switching Fast Ethernet Full duplex, IEEE802.3U compliant
Audio Interface	
Chip	Realtek ALC202A
Interface	Support Line-in, Line-out and MIC-in
Expansive Interface	
PCI	4 PCI bus master interface
Power and Environment	
Power Requirement	5V/3.2A, 5Vstandby/
Dimension	95mm x 114mm
Temperature	Operating within 0 ~ 60°C (32 ~ 140°F) Storage within -20 ~ 85°C (-4 ~ 185°F)
Software support	
Operation System	Windows 98SE/ME, Windows 2000, Windows XP Windows CE 4.0 or later, Windows XP Embedded Linux (Fedora Core 1, Mandrake 9.2 and Red Hat 9.0)
Ordering Code	
EE-260L5	SOM-ETX with VIA Luke CoreFusion™ processor 533MHz/VGA/LVDS/LAN/Audio/SATA
EE-260L8	SOM-ETX with VIA Luke CoreFusion™ processor 800MHz/VGA/LVDS/LAN/Audio/SATA
EE-260L10	SOM-ETX with VIA Luke CoreFusion™ processor 1GHz/VGA/LVDS/LAN/Audio/SATA

1. The specifications may be different as the actual production.
For further product information please visit the website at http://www.commell.com.tw

1.3 <Mechanical Drawing>

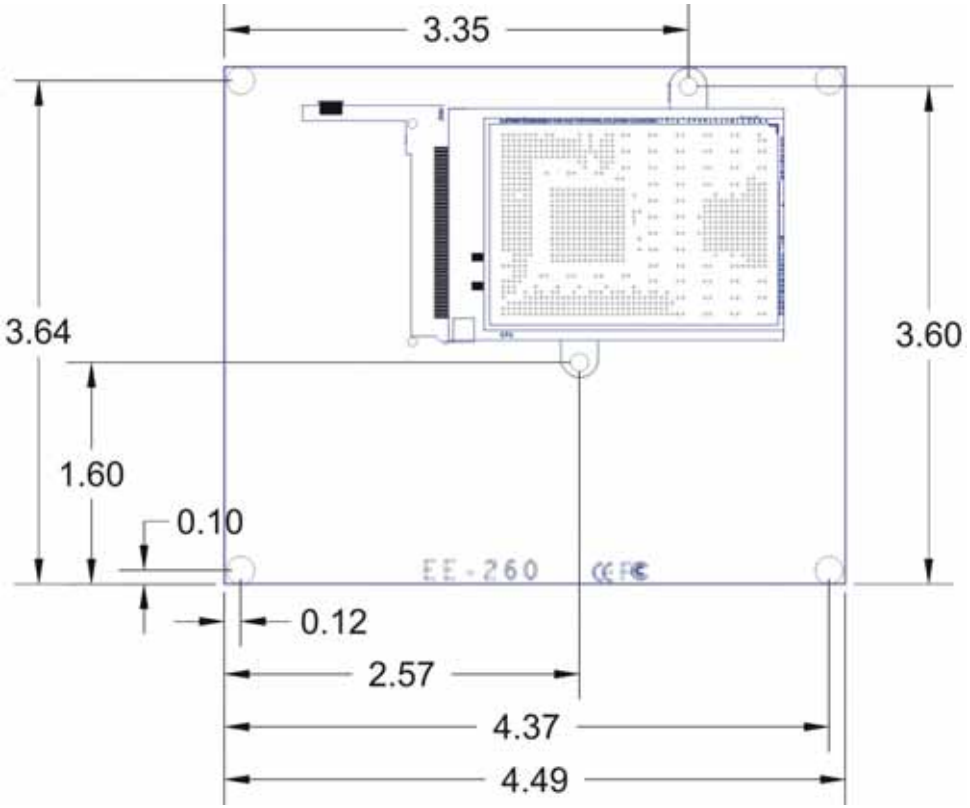

1.4 <Block Diagram>

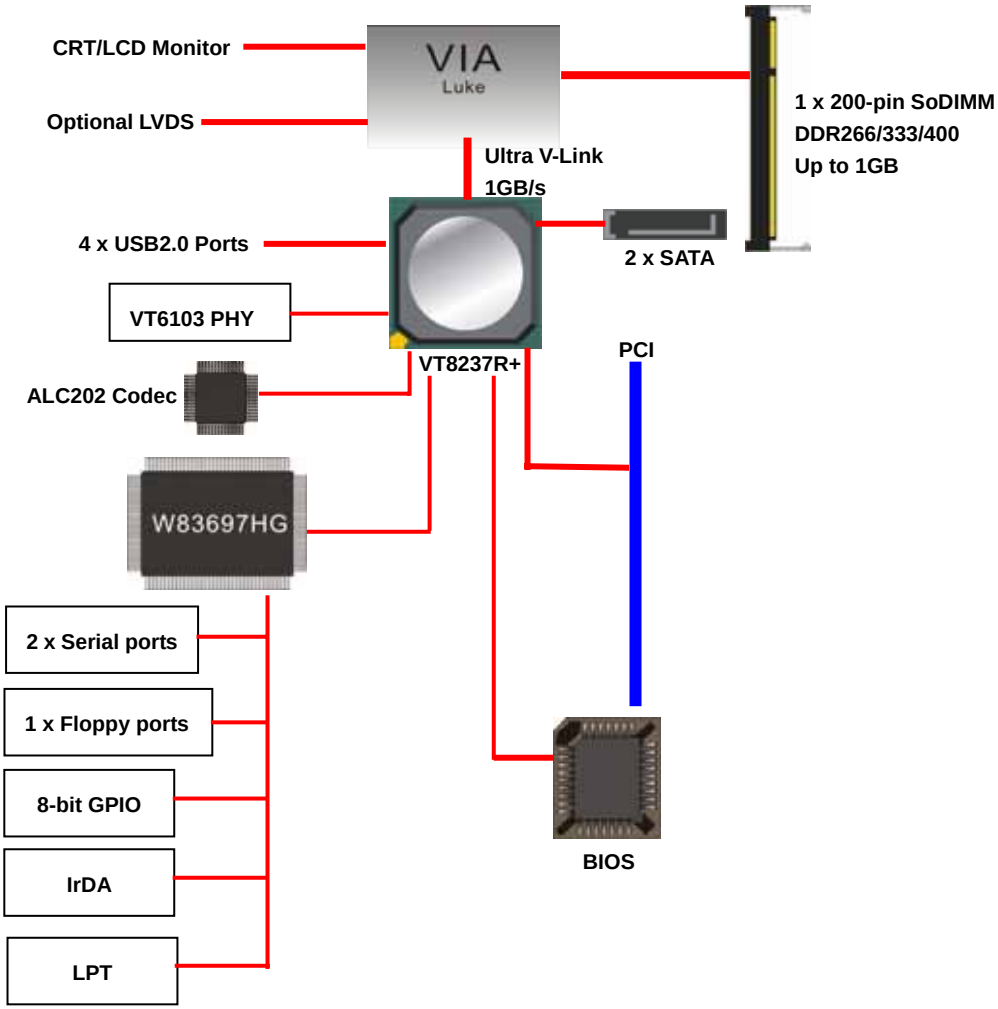

Chapter 2 <Hardware Setup>

2.1 <Connector Location>

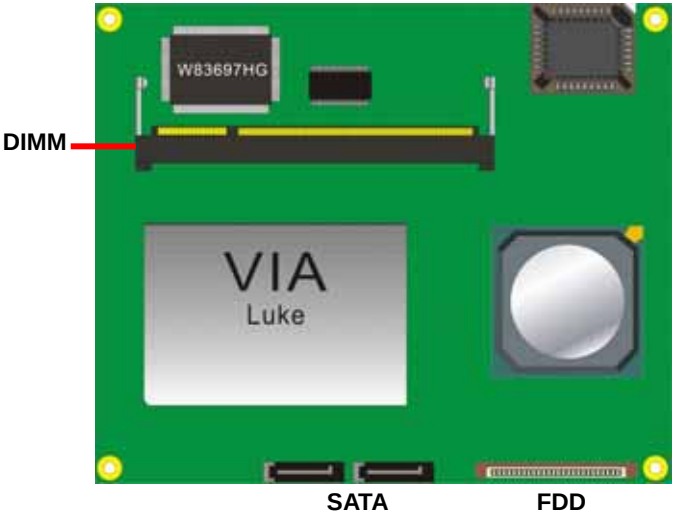

2.2 <Connector Reference>

2.2.1 <Internal Connector>

Connector	Function	Remark
DIMM	200-pin DDR SDRAM SoDIMM	Standard
FDD	26-pin slim type floppy connector	Standard
CN_SATA1/2	7-pin Serial ATA connector	Standard

2.3 <CPU and Memory Setup>

2.3.1< CPU>

The board supports Embedded VIA Luke CoreFusion TM processor, default ratio is 533Mhz/800Mhz/1GHz with CPU cooler fan, Luke 533 (533MHz) with heatsink only.

2.3.2 <Memory>

The board supports one 200-pin DDR SoDIMM SDRAM and up to 1GB of capacity, only non-ECC, unbuffered memory is supported.

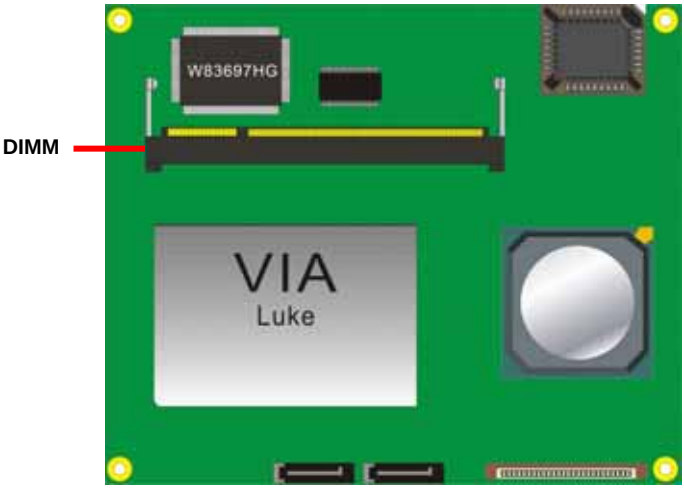

(1. Insert the DDR SO-DIMM module into the socket at 45 degree)

(2. Press down the module with a click sound)

2.4 <Enhanced IDE & CF Interface Optional >

The module supports two enhanced IDE interface, dual channel for 4 ATAPI devices with ATA33.

2.5 <Serial ATA Interface>

Based on VIA VT8237R+ Southbridge, the board supports two Serial ATA interfaces with RAID 0 and 1 array function. The following is the list of the specification of the Serial ATA.

1. Complies with Serial ATA Specification Revision 1.0
2. Dual Channel master mode PCI
3. On-chip two-channel Serial ATA (S-ATA) PHY for support of up to two S-ATA devices directly.
4. S-ATA drive transfer rate is capable of up to 150 MB/s per channel (serial speed of 1.5 Gbit/s).

For more information please visit VIA website (www.via.com.tw)

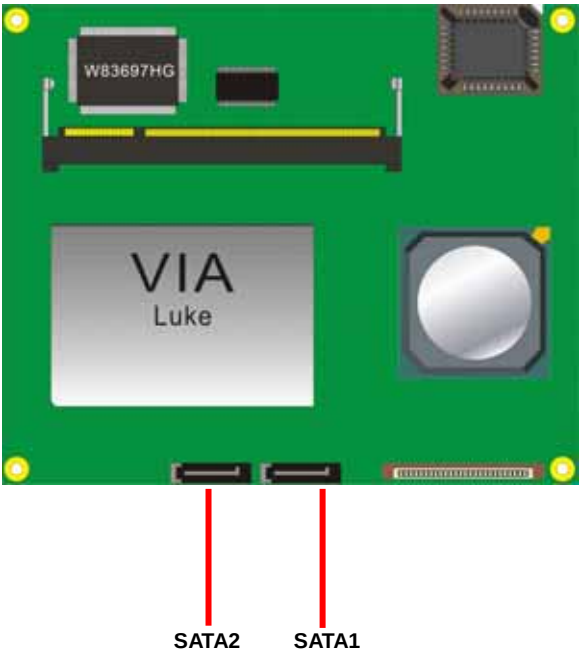

2.6 <Floppy Port>

The board provides a slim type floppy port; please use the 26-pin ribbon cable in the package to connect the floppy device.

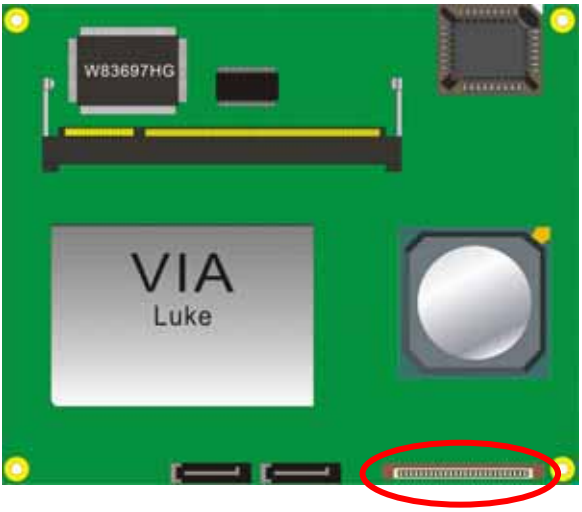

FDD

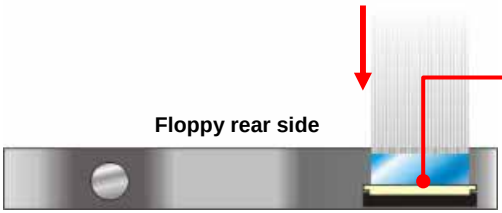

1. Lift up this plastic bar
2. Slot the cable in (Blue paste for outside)
3. Press back the plastic bar

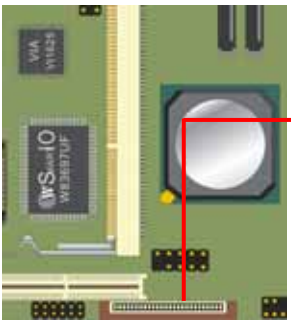

4. Lift up the brown plastic bar
5. Slot the cable in (Blue paste for brown bar side)
6. Press back the plastic bar

2.7 <LAN Interface>

The board provides 10/100Mbps LAN interfaces with VIA VT6103 PHY PCI controller, and compliant with standard IEEE 802.3 Ethernet interface for 100BASE-TX.

2.8 <Onboard Display Interface>

Based on VIA Luke CoreFusion ^{TM} processor, the module supports integrated S3 Graphics UniChrome Pro IGP graphics, with BIOS selectable 16/32/64MB shared with system memory for frame buffer.

2.8.1 <Analog VGA Interface>

The module provides a DB15 VGA connector up to 1920 x 1400 dpi on the rear I/O panel.

2.9<USB2.0 & IEEE1394 Interface>

Based on VIA VT8237R+, the board provides 4 USB2.0 ports.The USB2.0 interface provides up to 480Mbps of transferring rate.

Interface	USB2.0
Controller	VIA VT8237R+
Transfer Rate	Up to 480Mb/s

PS: The USB2.0 will be only active when you connecting with the USB2.0 devices, if you insert an USB1.1 device, the port will be changed to USB1.1 protocol automatically. The transferring rate of USB2.0 as 480Mbps is depending on device capacity, exact transferring rate may not be up to 480Mbps.

2.10 <Serial Port>

The board provides two RS232 serial ports.

(This Page is Left For Blank)

Chapter 3 <System Configuration>

3.1 <SATA RAID Configuration>

The board supports two Serial ATA ports onboard, and supports RAID 0, 1 and JBOD disk array, the RAID 0, 1 and JBOD are specified below:

RAID 0 (Stripping): Two hard drives operating as one drive for optimized data R/W performance. It needs two unused drives to build this operation.

RAID 1 (Mirroring): Copies the data from first drive to second drive for data security, and if one drive fails, the system would access the applications to the workable drive. It needs two unused drives or one used and one unused drive to build this operation. The second drive must be the same or lager size than first one.

JBOD (Span): As different as RAID 0, the JBOD combines two disks as one without any fault tolerance and I/O performance enhancement.

To build Serial ATA disk array, please press <TAB> while booting up the system before entering OS, and follow the instructions to edit the RAID function.

(Selectable Functions)

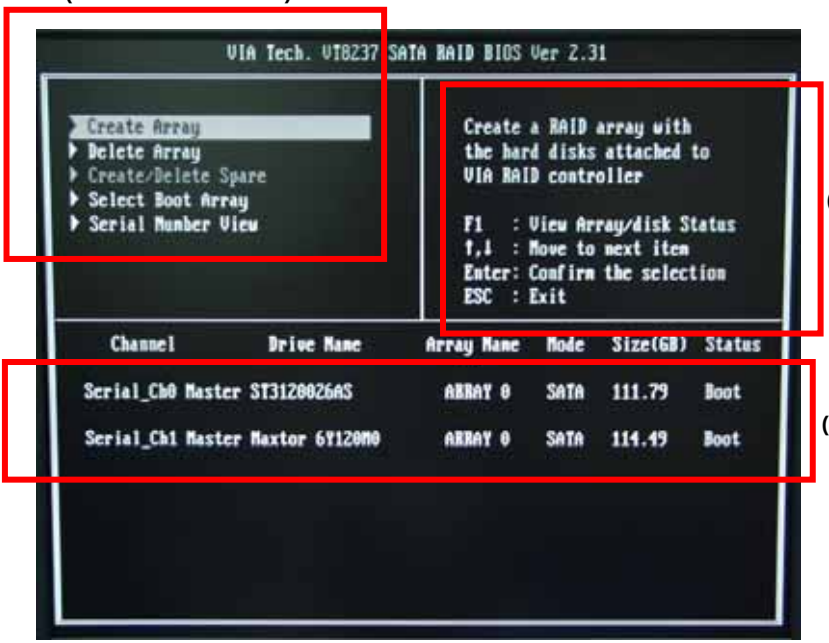

(Option Instruction)

(Disk Statement)

You also can edit disk array under OS, please install the VIA RAID Utility in the driver CD.

(To getting start, please click here to learn more information)

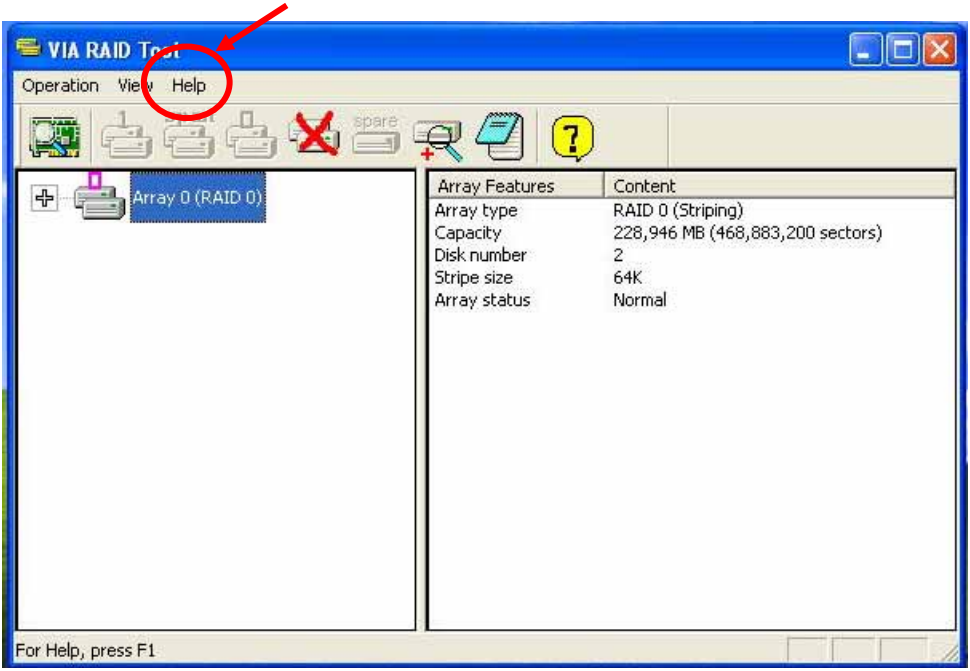

(Click here to build RAID 0)

(Click here to build RAID JBOD)

(Click here to build RAID 0)

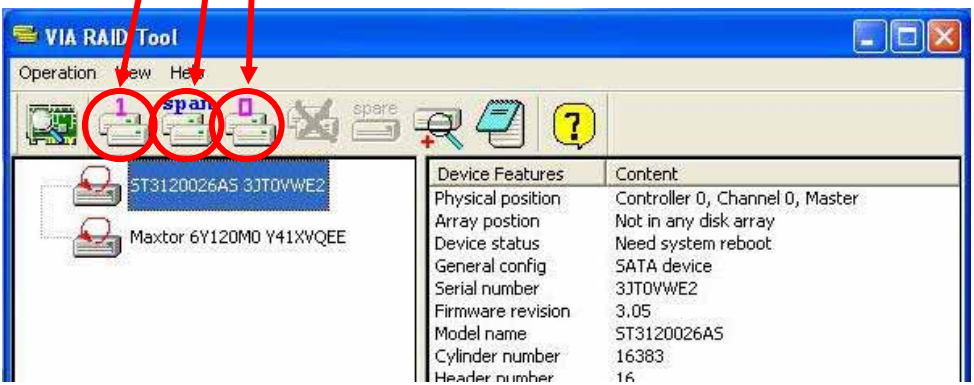

3.2 <Audio Configuration>

The board provides 2 channel audio interface with driver installed, please install the VIA audio driver in the CD before getting start to enjoy the 2 channel sound system.

3.3 <Display Configuration>

The board provides onboard analog VGA interface, and optional digital display interface with LVDS , please install the VIA video driver before enjoy the vivid display.

Based on the VIA Luke with S3 UniChrome Pro graphic, the board provides dual display function for clone or extended desktop modes with secondary display device attached.

After installing video driver, please launch the desktop display properties.

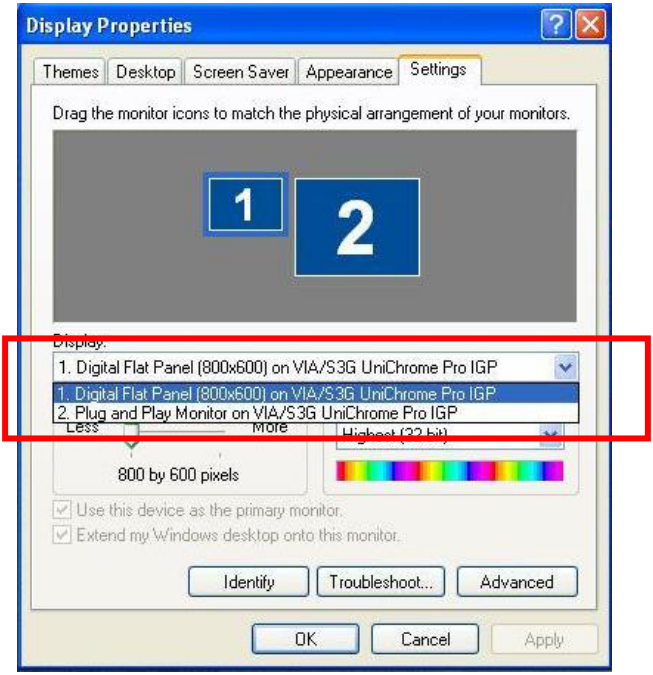

Please select each device to configure the resolution and color bit.

For secondary display device, you have two options selectable.

For more display properties setting, please click "Advanced" button.

(This Page is Left for Blank)

Chapter 4 <BIOS Setup>

The motherboard uses the Award BIOS for the system configuration. The Award BIOS in the single board computer is a customized version of the industrial standard BIOS for IBM PC AT-compatible computers. It supports Intel x86 and compatible CPU architecture based processors and computers. The BIOS provides critical low-level support for the system central processing, memory and I/O sub-systems.

The BIOS setup program of the single board computer let the customers modify the basic configuration setting. The settings are stored in a dedicated battery-backed memory, NVRAM, retains the information when the power is turned off. If the battery runs out of the power, then the settings of BIOS will come back to the default setting.

The BIOS section of the manual is subject to change without notice and is provided here for reference purpose only. The settings and configurations of the BIOS are current at the time of print, and therefore they may not be exactly the same as that displayed on your screen.

To activate CMOS Setup program, press ＜DEL＞ key immediately after you turn on the system. The following message "Press DEL to enter SETUP" should appear in the lower left hand corner of your screen. When you enter the CMOS Setup Utility, the Main Menu will be displayed as **Figure 4-1**. You can use arrow keys to select your function, press ＜Enter＞ key to accept the selection and enter the sub-menu.

Figure 4-1 CMOS Setup Utility Main Screen

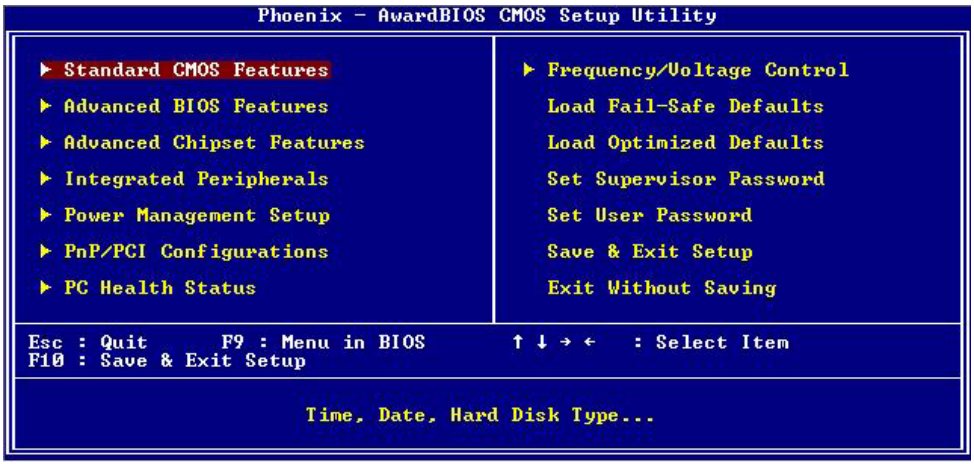

(This Page is Left for Blank)

Appendix A <ETX connector Assignment>

Connector A

A1	GND	A2	GND	A51	VCC	A52	VCC
A3	PCICLK5	A4	PCICLK6	A53	PAR	A54	-SERR
A5	GND	A6	GND	A55	-GPERR	A56	N/C
A7	PCICLK3	A8	PCICLK4	A57	-PME	A58	-USB2
A9	-REQ3	A10	-GNT3	A59	-LOCK	A60	-DEVSEL
A11	-GNT2	A12	+3.3V	A61	-TRDY	A62	-USB3
A13	-REQ2	A14	-GNT1	A63	-IRDY	A64	-STOP
A15	-REQ1	A16	+3.3V	A65	-FRAME	A66	-USB2
A17	-GNT0	A18	N/C	A67	GND	A68	GND
A19	VCC	A20	VCC	A69	AD16	A70	-CBE2
A21	SERIRQ	A22	-REQ0	A71	AD17	A72	+USB3
A23	AD0	A24	+3.3V	A73	AD19	A74	AD18
A25	AD1	A26	AD2	A75	AD20	A76	USB-
A27	AD4	A28	AD3	A77	AD22	A78	AD21
A29	AD6	A30	AD5	A79	AD23	A80	-USB1
A31	-CBE0	A32	AD7	A81	AD24	A82	-CBE3
A33	AD8	A34	AD9	A83	VCC	A84	VCC
A35	GND	A36	GND	A85	AD25	A86	AD26
A37	AD10	A38	AUXAL	A87	AD26	A88	+USB0
A39	AD11	A40	MIC	A89	AD27	A90	AD29
A41	AD12	A42	AUXAR	A91	AD30	A92	+USB1
A43	AD13	A44	N/C	A93	-PCIRST	A94	AD31
A45	AD14	A46	SNDL	A95	-INTRC	A96	-INTRD
A47	AD15	A48	ASGND	A97	-INTRA	A98	-INTRB
A49	-CBE1	A50	SNDR	A99	GND	A100	GND

Connector B

B1	GND	B2	GND	B51	VCC	B52	VCC
B3	LGP0	B4	N/C	B53	N/C	B54	N/C
B5	LGP1	B6	N/C	B55	N/C	B56	N/C
B7	LGP2	B8	N/C	B57	N/C	B58	N/C
B9	LGP3	B10	N/C	B59	N/C	B60	N/C
B11	LGP4	B12	N/C	B61	N/C	B62	N/C
B13	LGP5	B14	N/C	B63	N/C	B64	N/C
B15	LGP6	B16	N/C	B65	N/C	B66	N/C
B17	N/C	B18	N/C	B67	GND	B68	GND
B19	N/C	B20	N/C	B69	N/C	B70	N/C
B21	LGP7	B22	N/C	B71	N/C	B72	N/C
B23	N/C	B24	N/C	B73	N/C	B74	N/C
B25	N/C	B26	N/C	B75	N/C	B76	N/C
B27	N/C	B28	N/C	B77	N/C	B78	N/C
B29	N/C	B30	N/C	B79	N/C	B80	N/C
B31	N/C	B32	N/C	B81	N/C	B82	N/C
B33	N/C	B34	N/C	B83	VCC	B84	VCC
B35	GND	B36	GND	B85	N/C	B86	N/C
B37	N/C	B38	N/C	B87	N/C	B88	N/C
B39	N/C	B40	N/C	B89	N/C	B90	N/C
B41	N/C	B42	N/C	B91	N/C	B92	N/C
B43	N/C	B44	N/C	B92	N/C	B94	N/C
B45	N/C	B46	N/C	B95	N/C	B96	N/C
B47	N/C	B48	N/C	B97	N/C	B98	N/C
B49	N/C	B50	N/C	B99	GND	B100	GND

Connector C

C1	GND	C2	GND	C51	LPT	C52	N/C
C3	AR	C4	AB	C53	VCC	C54	GND
C5	HSYNC	C6	AG	C55	-STB	C56	-AFD
C7	VSYNC	C8	SPCLK2	C57	N/C	C58	PD7
C9	-DETEC	C10	SPD2	C59	IRRX	C60	-ERR
C11	CLK2M	C12	A7M	C61	IRTX	C62	PD6
C13	CLK2P	C14	A7P	C63	RXD2	C64	-INIT
C15	GND	C16	GND	C65	GND	C66	GND
C17	A5P	C18	A6P	C67	-RTS2	C68	PD5
C19	A5M	C20	A6M	C69	-DTR2	C70	-SLIN
C21	GND	C22	GND	C71	-DCD2	C72	PD4
C23	A3M	C24	A4P	C73	-DSR2	C74	PD3
C25	A3P	C26	A4M	C75	-CTS2	C76	PD2
C27	GND	C28	GND	C77	TD2	C78	PD1
C29	A2M	C30	CLK1P	C79	-RI2	C80	PD0
C31	A2P	C32	CLK1M	C81	VCC	C82	VCC
C33	GND	C34	GND	C83	RD1	C84	-ACK
C35	A0P	C36	A1P	C85	-RTS1	C86	BUSY
C37	A0M	C38	A1M	C87	-DTR1	C88	PE
C39	VCC	C40	VCC	C89	-DCD1	C90	SLCT
C41	N/C	C42	N/C	C91	-DSR1	C92	MSCLK
C43	N/C	C44	INV ON	C93	-CTS1	C94	MSDAT
C45	N/C	C46	AVDDCTL	C95	TD1	C96	KBCLK
C47	N/C	C48	N/C	C97	-RL1	C98	KBDATA
C49	N/C	C50	N/C	C99	GND	C100	GND

Connector D

D1	GND	D2	GND	D51	-SDIOW	D52	-PDIOR
D3	5V_SB	D4	PWRGD	D53	SDDREQ	D54	-PDIOW
D5	PS_ON	D6	SYSPKR	D55	SDD15	D56	PDDREQ
D7	PW_BN	D8	BATT	D57	SDD0	D58	PDD15
D9	N/C	D10	N/C	D59	SDD14	D60	PDD0
D11	N/C	D12	-ACT	D61	SDD1	D62	PDD14
D13	N/C	D14	-SP100	D63	SDD13	D64	PDD1
D15	N/C	D16	N/C	D65	GND	D66	GND
D17	VCC	D18	VCC	D67	SDD2	D68	PDD13
D19	-OC0	D20	N/C	D69	SDD12	D70	PDD2
D21	-EXTSMI	D22	N/C	D71	SDD3	D72	PDD12
D23	SMBCLK	D24	SMBDATA	D73	SDD11	D74	PDD3
D25	-SCS3	D26	N/C	D75	SDD4	D76	PDD11
D27	-SCS1	D28	-HDLED2	D77	SDD10	D78	PDD4
D29	SDA2	D30	-PCS3	D79	SDD5	D80	PDD10
D31	SDA0	D32	-PCS1	D81	VCC	D82	VCC
D33	GND	D34	GND	D83	SDD9	D84	PDD5
D35	-LID	D36	PDA2	D85	SDD6	D86	PDD9
D37	SDA1	D38	PDA0	D87	SDD8	D88	PDD6
D39	IRQ15	D40	PDA1	D89	-RING	D90	GPI1
D41	-BATLOW	D42	N/C	D91	RD-	D92	PDD8
D43	-SDDACK	D44	IRQ14	D93	RD+	D94	SDD7
D45	SHDRDY	D46	PDDACK	D95	TD-	D96	PDD7
D47	-SDIOR	D48	PHDRDY	D97	TD+	D98	-IDERST
D49	VCC	D50	VCC	D99	GND	D100	GND

Appendix B<I/O Port Pin Assignment>

B.1 <Floppy Port>

Connector: **FDD**

Type: 26-pin connector

Pin	Description	Pin	Description
1	VCC	2	INDEX
3	VCC	4	DRV0
5	VCC	6	DSKCHG
7	DRV1	8	N/C
9	MTR1	10	MTR0
11	RPM	12	DIR
13	N/C	14	STEP
15	Ground	16	WRITE DATA
17	Ground	18	WRITE GATE
19	N/C	20	TRACK 0
21	N/C	22	WRPTR
23	Ground	24	RDATA-
25	Ground	26	SEL

B.2 <Serial ATA Port>

Connector: **CN_SATA1/2**

Type: 7-pin wafer connector

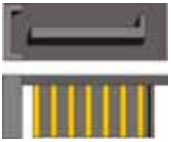

1	2	3	4	5	6	7
GND	RSATA_TXP1	RSATA_TXN1	GND	RSATA_RXN1	RSATA_RXP1	GND

(This Page is Left for Blank)

Appendix C <Flash BIOS>

C.1 BIOS Auto Flash Tool

The board is based on Award BIOS and can be updated easily by the BIOS auto flash tool. You can download the tool online at the address below:

http://www.award.com
http://www.commell.com.tw/support/support.htm

File name of the tool is "awdflash.exe", it's the utility that can write the data into the BIOS flash ship and update the BIOS.

C.2 Flash Method

1. Please make a bootable floppy disk.
2. Get the last .bin files you want to update and copy it into the disk.
3. Copy awardflash.exe to the disk.
4. Power on the system and flash the BIOS. (Example: C:/ awardflash XXX.bin)
5. Re-star the system.

Any question about the BIOS re-flash please contact your distributors or visit the web-site at below:

http://www.commell.com.tw/support/support.htm

(This Page is Left for Blank)

Contact Information

Any advice or comment about our products and service, or anything we can help you please don't hesitate to contact with us. We will do our best to support you for your projects and business.

Taiwan Commate Computer Inc.

Address	8F, No. 94, Sec. 1, Shin Tai Wu Rd., Shi Chih Taipei Hsien, Taiwan
TEL	+886-2-26963909
FAX	+886-2-26963911
Website	http://www.commell.com.tw
E-Mail	info@commell.com.tw (General Information) tech@commell.com.tw (Technical Support)

Commell is our trademark of industrial PC division

COMMELL
Stage For Your Success